General Disclaimer

One or more of the Following Statements may affect this Document

- This document has been reproduced from the best copy furnished by the organizational source. It is being released in the interest of making available as much information as possible.

- This document may contain data, which exceeds the sheet parameters. It was furnished in this condition by the organizational source and is the best copy available.

- This document may contain tone-on-tone or color graphs, charts and/or pictures, which have been reproduced in black and white.

- This document is paginated as submitted by the original source.

- Portions of this document are not fully legible due to the historical nature of some of the material. However, it is the best reproduction available from the original submission.

Produced by the NASA Center for Aerospace Information (CASI)

THIS NASA INVENTION APPEARS TO HAVE EXCELLENT COMMERCIAL POTENTIAL

NASA CASE NO. NPO-15,562-1

PRINT FIG. #1

NOTICE

The invention disclosed in this document resulted from research in aeronautical and space activities performed under programs of the National Aeronautics and Space Administration. The invention is owned by NASA and is, therefore, available for licensing in accordance with the NASA Patent Licensing Regulation (14 Code of Federal Regulations 1245.2).

To encourage commercial utilization of NASA-owned inventions, it is NASA policy to grant licenses to commercial concerns. Although NASA encourages nonexclusive licensing to promote competition and achieve the widest possible utilization, NASA will consider the granting of a limited exclusive license, pursuant to the NASA Patent Licensing Regulations, when such a license will provide the necessary incentive to the licensee to achieve early practical application of the invention.

Address inquiries and all applications for license for this invention to NASA Resident Office-JPL, NASA Patent Counsel, Mail Code 180-801, 4800 Oak Grove Dr., Pasadena, CA 91103. Approved NASA forms for application for nonexclusive or exclusive license are available from the above address.

NRO-JPL

(NASA-Case-NPO-15562-1) ACOUSTIC LEVITATION METHODS AND APPARATUS Patent Application (NASA) 21 p HC A02/MF A01 CSCL 20A

N82-27086

Unclas
G3/71 19942

81/197

ACOUSTIC LEVITATION METHODS AND APPARATUS

Inventors: MARTIN B. BARMATZ
NATHAN JACOBI

Contractor: JET PROPULSION LABORATORY, Caltech/ Pasadena, CA 91109

~~JPL Case No. 15562~~
NASA NPO-15562-1

~~February 8, 1982~~

AWARDS ABSTRACT

The object of the invention is to provide methods for acoustically levitating objects in cylindrical or spherical chambers.

In a spherical chamber 10 (Fig. 1), the lowest (longest wavelength) resonant mode of the chamber is excited by applying acoustic energy of a wavelength equal to 3.02R, where R is the chamber radius. This produces a "force well" toward which objects move, at the center 16 of the sphere. For a given acoustic transducer output, the greatest sound intensity in the chamber is obtained when the "Q" is highest, which is obtained when a pure radial mode is applied. The two lowest pure radial modes for the spherical chamber, are excited when the applied wavelengths are 1.40R (Fig. 4) and 0.814R (Fig. 7). For a cylindrical chamber 50 (Figs. 10 and 11) the lowest mode is excited at a wavelength of 3.41R, where R is the chamber radius. The lowest pure radial modes in such a cylindrical chamber are at wavelength of 1.64R (Fig. 14) and 0.896 R (Fig. 15). The wavelengths are obtained from Bessel function properties of the chambers (in ways described in the patent application).

A major novel feature is applying wavelengths of 3.02R, 1.40R or 0.814R to a spherical chamber of radius R, or wavelengths of 3.41R, 1.64R or .896R to a cylindrical chamber of radius R, to excite the lowest mode or one of the two lowest pure radial modes of the chamber.

Patent No. 4,364,097
Filing Date 3/31/82
Pasadena, CA 91109
(City) (State) (Zip)

NPO-13,562-1

ORIGINAL PAGE IS
OF POOR QUALITY

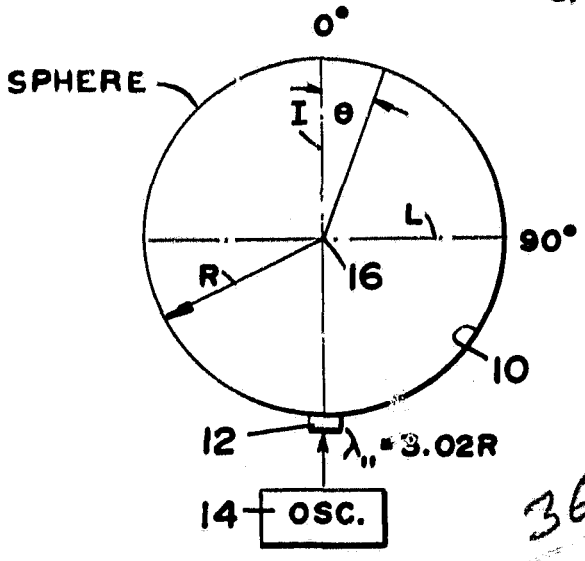

FIG. 1

364,097 40%

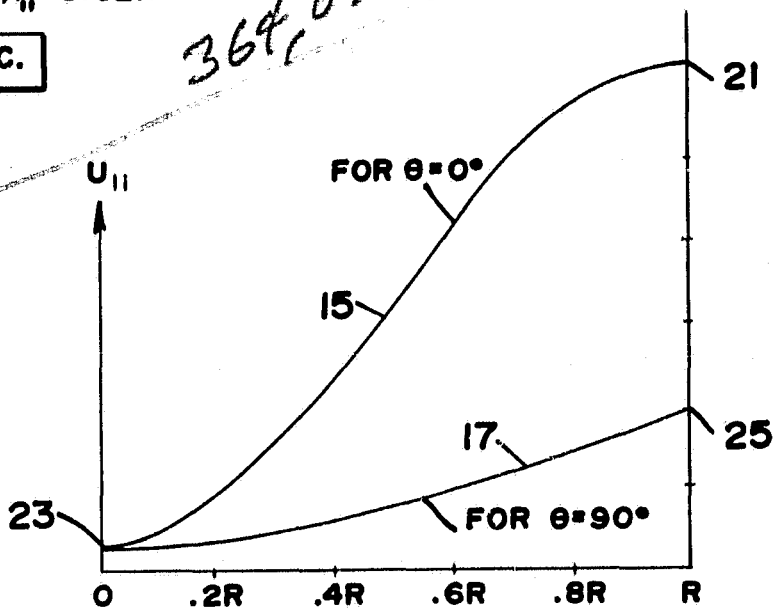

FIG. 2

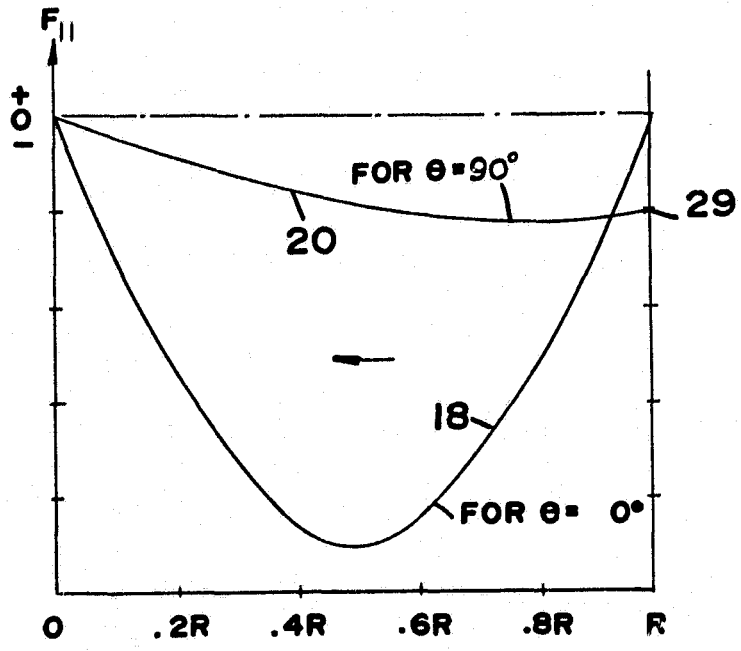

FIG. 3

ORIGINAL PAGE IS
OF POOR QUALITY

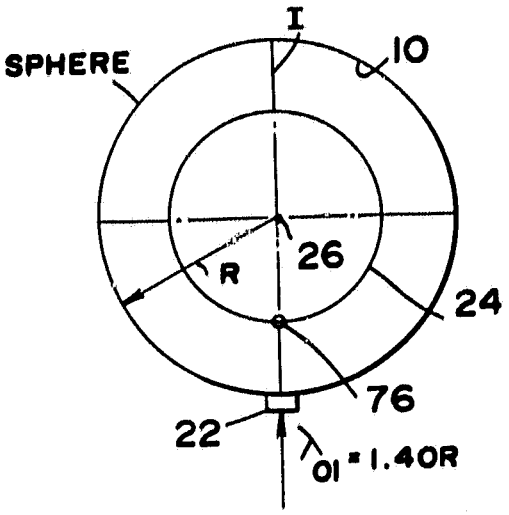

FIG. 4

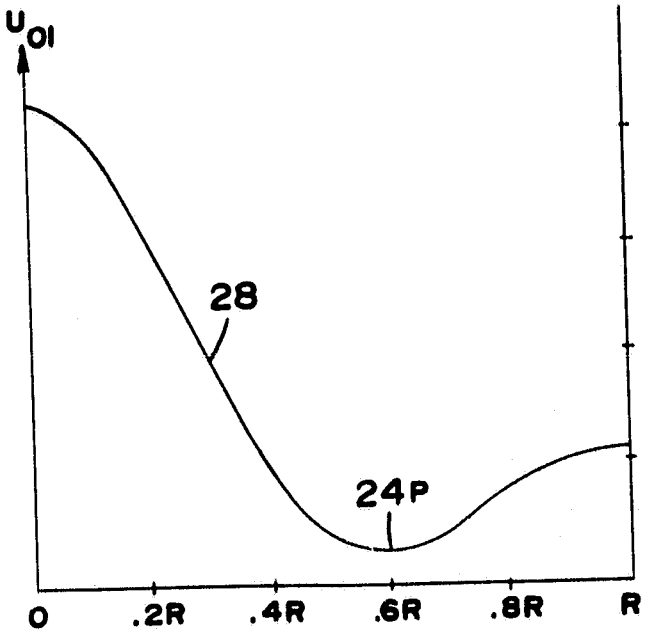

FIG. 5

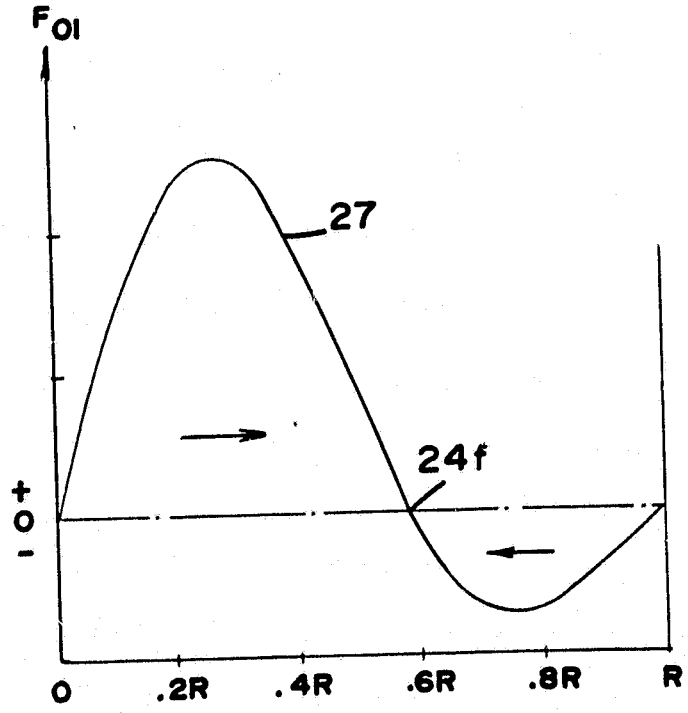

FIG. 6

ORIGINAL PAGE IS
OF POOR QUALITY

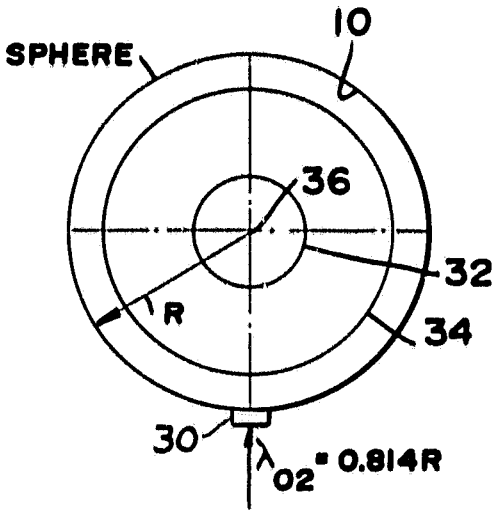

FIG 7

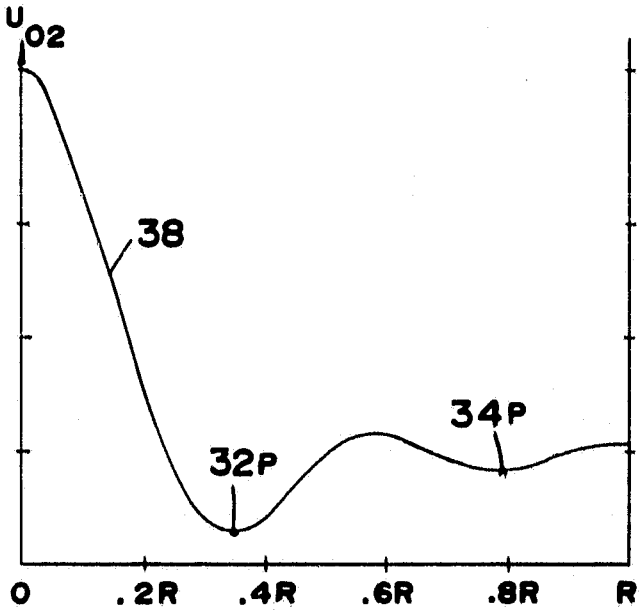

FIG. 8

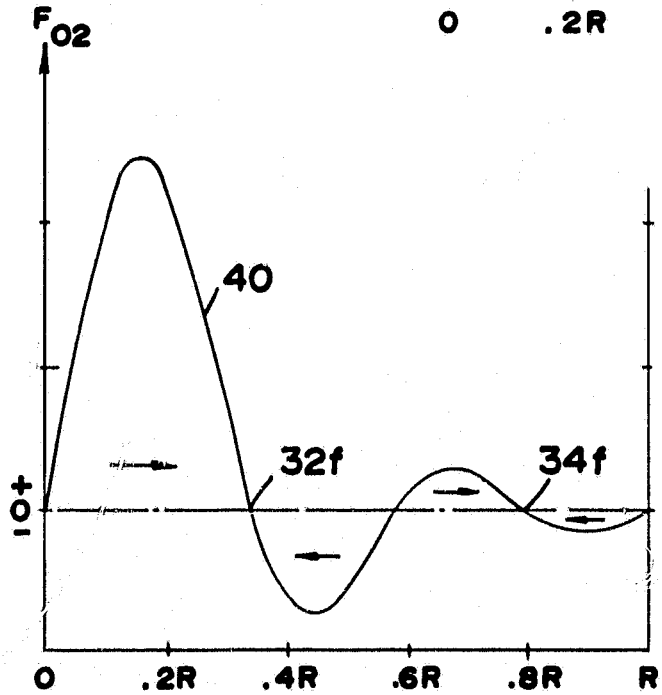

FIG. 9

ORIGINAL PAGE IS
OF POOR QUALITY

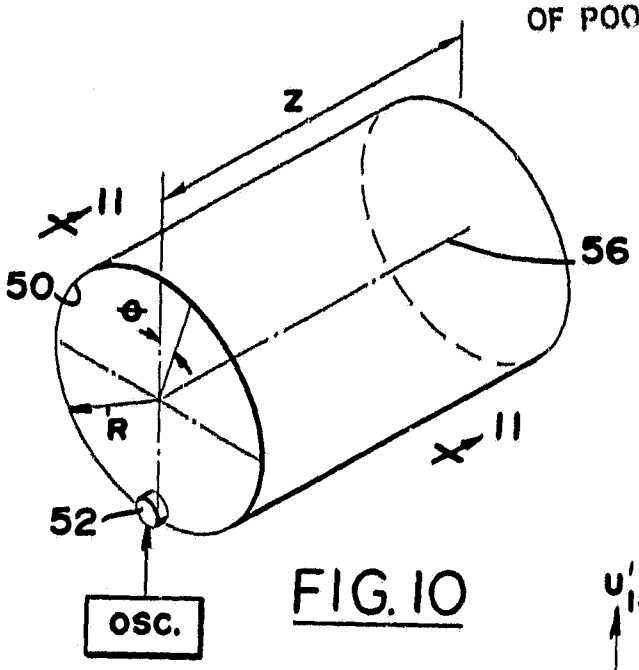

FIG. 10

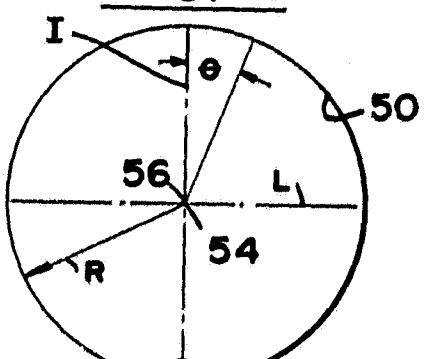

FIG. 11

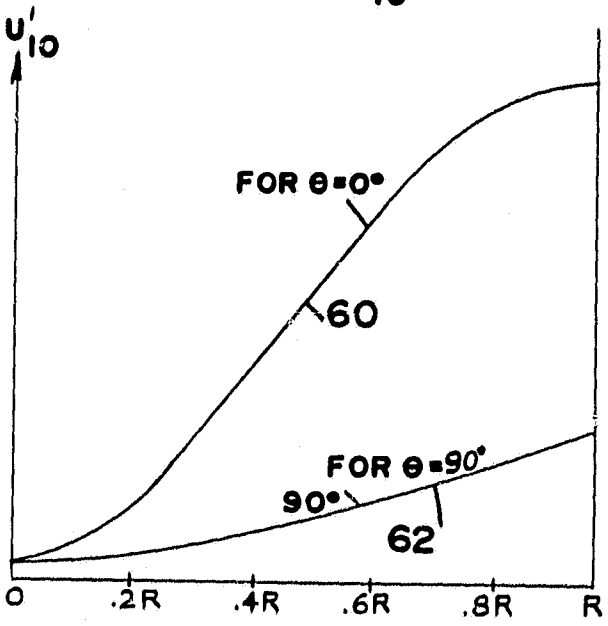

FIG. 12

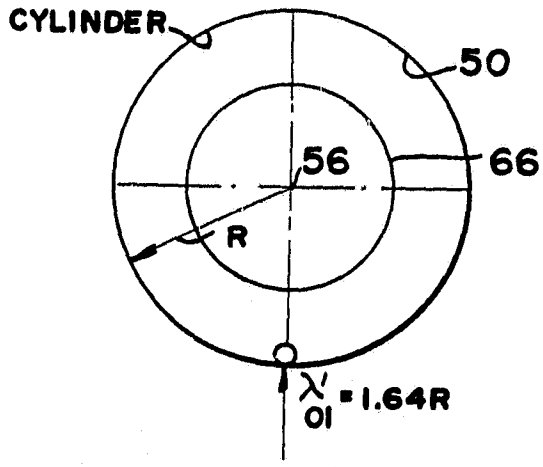

FIG. 14

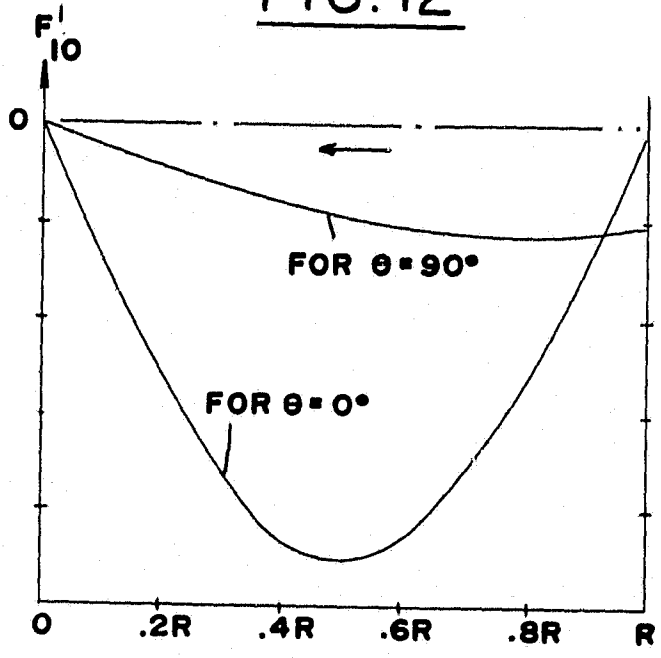

FIG. 13

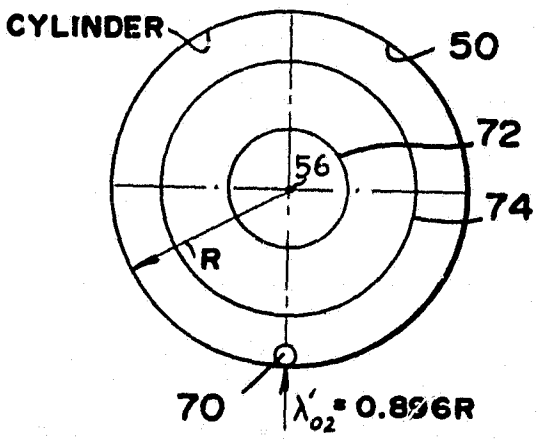

FIG. 15

~~81/197~~
~~JPL 15562~~
NASA NPO-15562-1

3,647,077
3/31/72

ACOUSTIC LEVITATION METHODS AND APPARATUS

ORIGIN OF THE INVENTION

The invention described herein was made in the performance of work under a NASA contract and is subject to the provisions of Section 305 of the National Aeronautics and Space Act of 1958, Public Law 85-568 (72 Stat. 435; 42 USC 2457).

BACKGROUND OF THE INVENTION

Acoustic levitation has been developed for chambers of rectangular cross section, as described in U. S. Patent 3,882,732 by Wang et al. Such levitation has been achieved by applying a frequency along each of the three chamber dimensions which produces a wavelength equal to twice the corresponding chamber dimension, or by applying a frequency which is an integral multiple thereof. It was thought that standing wave patterns could be established in chambers with curved walls by choosing wavelengths that were in a similar simple relationship to the chamber dimensions. However, such wavelengths do not produce standing wave patterns. Methods for effectively levitating objects within chambers with curved walls, such as spheres or cylinders, would enable the utilization of acoustic levitation in a wide variety of applications.

SUMMARY OF THE INVENTION

In accordance with the present invention, methods and apparatuses are provided for levitating objects within chambers having curved walls. Transducers are energized at precisely selected frequencies to apply acoustic waves to the chambers. For cylindrical chambers, wavelengths are chosen which are solutions to derivatives of Bessel functions of the first kind. For spherical chambers, wavelengths are chosen in accordance with the solutions to derivatives of spherical Bessel functions.

For a cylindrical chamber of radius R, the lowest levitation mode is produced by applying waves of a length 3.41R. For such a chamber, the lowest pure radial modes (the force on an object does not vary with its angular position) are obtained by applying waves of lengths 1.64R and 0.896R. For a sphere of radius R, the lowest mode is achieved by applying a wavelength of 3.02R, and the lowest pure radial modes are obtained at wavelengths of 1.40R, and 0.814R. The levitation position of an object corresponds to the minimum of the force potential well of the particular mode being applied.

The novel features of the invention are set forth with particularity in the appended claims. The invention will be best understood from the following description when read in conjunction with the accompanying drawings.

BRIEF DESCRIPTION OF THE DRAWINGS

Figure 1 is a simplified sectional view of

a spherical chamber, showing the wavelength λ_{11} which produces the first, or lowest mode therein, and the position of the force potential well which is created.

Figure 2 is a graph showing variations of force potential U_{11} with position, within the spherical chamber of Figure 1.

Figure 3 is a graph showing variations of acoustic force F_{11} with position, within the spherical chamber of Figure 1.

Figure 4 is a view of the chamber of Figure 1, showing the wavelength λ_{01} and force potential well for the lowest pure radial mode therein.

Figure 5 is a graph showing the variation of force potential U_{01} in the chamber of Figure 4.

Figure 6 is a graph showing variations of acoustic force F_{01} with position, in the chamber of Figure 4.

Figure 7 is a view similar to Figure 1, showing the wavelength λ_{02} and force potential wells for the second lowest pure radial mode in the chamber of Figure 4.

Figure 8 is a graph showing the variation of force potential U_{02} with position in the chamber of Figure 7.

Figure 9 is a graph showing the variation of acoustic force F_{02} with position in the chamber of Figure 7.

Figure 10 is a simplified perspective view of a cylindrical chamber.

Figure 11 is a sectional view taken on the line 11-11 of Figure 10, showing the wavelength λ'_{10} which produces the lowest cylindrical resonant mode

with no length dependance (along the cylinder length), and the position of the force potential well which is created.

Figure 12 is a graph showing variations of acoustic force potential U'_{10} along certain radii for the chamber shown in Figure 11

Figure 13 is a graph showing the variation of force with position in the graph of Figure 12.

Figure 14 is a view similar to Figure 11, but showing the force potential well resulting from application of waves of the lowest cylindrical pure radial mode.

Figure 15 is a view similar to Figure 11, but showing the force potential wells resulting from excitation of the cylinder in the second lowest cylindrical pure radial mode.

DESCRIPTION OF THE PREFERRED EMBODIMENTS

Figure 1 illustrates a spherical chamber 10 in which an acoustic standing wave pattern is established by sound transmitted from a transducer 12 driven by an oscillator 14. The transducer is driven at a frequency which produces acoustic waves of a wavelength of 3.02R, where R is the radius of the sphere. Of course, the frequency equals the speed of sound divided by the desired wavelength, with the speed of soundin air at sea level and room temperature being about 344 meters per second. The acoustic field produces a force potential well at the center 16 of the chamber. In the absence of other forces, an object introduced into the chamber will move to the force well 16. This particular standing wave pattern mode may be referred to as the λ_{11} mode, with λ representing the wavelength and the 11 representing the solution of the derivative of the spherical Bessel function used for calculating the

wavelength for that mode, as will be described below. The λ_{11} mode is not a pure radial mode, in that the force applied to an object within the chamber, depends not only on the radial distance of the object from the center 16, but also on the angle θ of that position from a zero line I which is inline with the transducer 12. The force pushing an object towards the center 16 is greatest along the line I, and decreases at progressively larger angles of up to 90°, with the least force being applied along the lateral line L.

Figure 2 contains two curves 15, 17 that show the variation of the force potential U_{11} with position for the lowest spherical mode. The curve 15 represents the potential along the line I in Figure 1, wherein $\theta = 0$, while curve 17 represents the potential along line L wherein $\theta = 90°$. The force potential U_{11} may be thought of as a curved surface on which a ball can roll. A ball placed near the periphery of the chamber at position 21 on curve 15, would (after given a gentle push) roll down a steep curve until it reached the center at 23, and after rolling back and forth (on either side of the sphere center at radius 0) would remain at the center at 23. A ball placed at 25 on the curve 17, would also roll to position 23, but the force on the ball and its rolling speed would not be as great as for graph 15. The force applied to an object equals the negative of the derivative of the curve 15 or 17, or in other words, minus the slope of the curve.

Figure 3 contains two curves 18, 20 showing the variation in force applied to an object in the

chamber, with radial distance from the center of the chamber. The curve 18 represents the variation in force along the line I, wherein $\theta = 0°$, and the graph 20 represents the variation in force along the line L, wherein $\theta = 90°$. In the force graphs such as Figure 3, a negative force is a force that pushes towards the center of the chamber, while a positive force is one that pushes away from the center. The force along the $\theta = 0°$ direction of line 18 is strongest midway between the periphery and center of the sphere. The force along the $\theta = 0°$ direction of line 18 is weaker, but has an appreciable (in fact, substantially maximum) value at the periphery of the sphere at 29. The appreciable force value at the wall of the sphere at 29 along the $\theta = 90°$ line, is in sharp contrast with the situation existing in chambers of rectangular cross section driven by waves along three perpendicular directions, wherein the force on an object is zero at the wall of the chamber and a maximum at a position halfway between the wall and the closest force well. An object placed in such a rectangular chamber near the wall of the chamber, may not move to the nearest force well even though there is sufficient force to hold it at the well once it reaches it. By contrast, an object placed at the inside wall of the spherical chamber of Figure 1, along the $\theta = 90°$ position will be assured of moving to the force well 16 if there is sufficient acoustic force to hold it there.

Figure 4 illustrates the spherical chamber 10 of Figure 1 driven by a transducer 22 energized at a frequency that produces a wavelength of 1.40R. The wavelength λ_{01} of 1.40R produces a force well 24

of spherical shape. This mode is the lowest pure radial mode, the term "pure radial" referring to the fact that the force on an object does not depend on its angular position with respect to the in-line line I, but only on the radial distance from the center 26 of the chamber. Figure 5 contains a curve 28 that shows the force potential U_{01} for this mode. Curve 28 has a minimum at 24P near 0.6R, which defines the spherically shaped force well at 24 in Figure 4. That is, if we again take the analogy of a ball rolling on a curved surface, the ball will tend to settle at the position 24P in Figure 5. The graph 27 in Figure 6 shows the variation of force with radial position, showing that the acoustic force pushing an object towards the well is zero at the point 24f which corresponds to points 24P in Figure 5.

Figure 7 shows the sphere 10 driven by a transducer 30 energized at a frequency which produces a wavelength λ_{02} of 0.814R. The wavelength λ_{02} is the second lowest pure radial mode. It produces force wells 32, 34 which are each of spherical shape and centered about the center 36 of the chamber. Figure 8 contains a graph 38 which shows the force potential U_{02} that corresponds to the λ_{02} mode. The curve has two minima at 32P and 34P that result in the force wells 32 and 34 in Figure 7. Figure 9 includes a graph 40 representing the variation in force on an object, with distance of the object from the center of the chamber. The points 32f and 34f on the graph represent the distances of the first and second spherical force wells 32, 34 in the sphere of Figure 7. Additional modes can be applied to a spherical chamber to produce additional force potential wells, with the precise wavelengths required

being drivable from a solution of a derivative of a spherical Bessel function, as described below. It is also possible to excite several modes simultaneously to produce additional potential well configurations for various levitation applications.

Figure 10 illustrates a vessel with a cylindrical chamber 50 in which an acoustic standing wave pattern is established by a transducer 52. As also shown in Figure 11, the transducer is energized at a frequency which produces a wavelength λ'_{10} equal to 3.41R, where R is the radius of the cross-section of the chamber. The resonant wavelength λ'_{10} produces a force potential well 54 which extends along the centerline 56 of the chamber. The particular wavelength λ'_{10} is not a pure radial mode, in that the force applied to an object lying within the cylinder depends upon the angle with respect to the line I which is inline with the transducer 52. Figure 12 includes two curves 60, 62 which show the variation of the force potential U'_{10} with radial distance from the axis of the chamber 50, with the curve 60 showing the variation along the line I and the curve 62 showing the variation along the lateral line L. In this particular mode, the potential as well as the force (shown in Figure 13) do not vary with the position along the axis 56 of the cylinder, e.g. there is no length (Z) dependence. An object can be held at a particular position along the axis by applying a separate plane wave mode associated only with the length of the cylinder, with the lowest such mode having a wavelength twice the length Z of the chamber and producing a pressure well halfway between the opposite ends of the chamber.

Figure 14 illustrates the chamber 50 when driven at the lowset pure radial mode wherein the wavelength λ'_{01} is 1.64R. This produces a cylindrical force well 66 which is concentric to the center line 56 of the cylinder. Being a pure radial mode, the force pushing an object towards

the well 66 is substantially the same at any angular position about the center line. Graphs showing variations of force potential with position, and force with position are almost identical to those shown in Figures 5 and 6 for the lowest pure radial mode of a sphere.

Figure 15 shows a transducer 70 driven at a wavelength λ_{02}^{1} of 0.896R, which produces two cylindrical pressure wells 72, 74 concentric with the center line 56 of the cylinder 50. This is also a pure radial mode, Graphs showing variation of force potential with position, and force with position, are almost identical to those shown in Figures 8 and 9 for the second lowest pure radial mode of a sphere.

When an object is placed in one of the chambers having a pure radial acoustic pattern, such as for the sphere of Figure 2, the object can take a position anywhere along the force well. However, external forces such as the force of gravity may move the object to a particular position, with an object 76 in Figure 4 being moved to the bottommost point of the spherical well 24 under the influence of gravity. In a zero gravity environment, the position of the object with respect to the acoustic force well, can be more easily controlled by introducing other forces such as those of electrostatic or magnetic fields.

The amount of energy required to produce a standing wave pattern in any chamber, and the precision of the frequency that must be applied, depends upon the Q of the chamber. A typical chamber of rectangular cross section has a Q of about 100, so that any frequency within a band of 1% of the center frequency will produce an acoustic field intensity which is within 3db of the intensity produced at the center frequency. When pure radial modes of curved chambers are excited as in Figures 4, 7, 14, and 15 the Q of the chamber may be much higher, such as in a range of about 300 to 1000. The Q depends

considerably on the accuracy of the geometry (e.g. how close to a perfect sphere or cylinder, and the sizes of any holes). Such high Q's are present because the acoustic reflections are perpendicular to the walls of the chamber, so there is substantially no rubbing of air (or other gas in the chamber) against the chamber walls, and therefore substantially no viscous losses. The acoustic field intensity is approximately proportional to the pressure produced by the transducer times Q. Accordingly, a high Q generates intense pressure fields leading to large forces on objects, even though only moderate driving energies are applied to transducers of only moderate output capacity. It may be noted that in experiments with comparable chambers (e.g. same proportion of surface occupied by holes), the highest Q's have been experienced in spherical chambers driven at pure radial modes, with somewhat lower Q's experienced in cylindrical chambers driven in pure radial modes, all of such Q's being greatest than experienced in any chambers in nonradial modes.

The use of curved chambers, such as those of spherical or cylindrical shape, has an additional advantage over those of rectangular cross section, in that the various modes are not simple multiples of one another. In a rectangular chamber, a second mode will have a frequency twice that of a first mode, so that if the first mode is applied there may be significant second harmonic presssure generated by non-linear acoustic effects, and then there will be a significant standing wave pattern of the second mode. Since the force wells of the first and second modes are separate from one another and at different positions, this can result in a situation where an object intended to be moved to the well of the first mode, will be shifted away from the well in an uncontrolled manner by the forces associated with the second harmonic.

For the spherical and cylindrical chambers, wherein second harmonics of a mode do not establish a second standing wave pattern, this problem is avoided. Another advantage of spherical and cylindrical chambers is that only one or two acoustic drivers are required to levitate an object at a unique position.

The force potential well patterns are derived from nonlinear acoustic theory. One approach is to determine the acoustic pressure p and particle velocity v of a given mode in the low intensity acoustic region. The force potential U may then be calculated using the expression:

$$u = \frac{p^2}{3rC^2} - \frac{rv^2}{2}$$

where p is the AC acoustic pressure, v is the particle velocity (of air or other gas), C is the sound velocity, and r is the gas density. The acoustic force components in the various directions are then obtained from the derivatives of the potential. An analysis of acoustic levitation in a cylindrical system shows that the required wavelength is given by the equation:

$$\lambda = 2\pi[k_z^2 + k_{mn}^2]^{-1/2}$$

where λ is the wavelength producing a standing wave of a particular mode in a cylindrical chamber, and k_{mn} represents the r,Θ component (along the radial and angular directions of the cross section, respectively) of the mode. k_z equals $n\pi/L$ where L is the length of the cylinder and n is the plane wave harmonic (and is an integer). k_{mn} equals $\alpha_{mn}\pi/R$, where R is the radius of the cylinder and α_{mn} is a number that depends upon the mode. In the case where there is no z component, so that k_z equals 0, then only the k_{mn} is of significance. In that case, the wavelength is given by:

ORIGINAL PAGE IS
OF POOR QUALITY

$$\lambda = \frac{2R}{\alpha_{mn}}$$

When m=0 there is no θ dependence, and this occurs for the modes of Figures 4 and 7. The term α_{mn} is a solution of the relationship $d[J_m(\pi\alpha)]/d\alpha=0$, where $J_m(\pi\alpha)$ is a Bessel function of the first kind. α_{10} (i.e. when m=1 and n=0) = 0.5861. As a result, k_{10} equals 1.84/R, and $\lambda_{10}=3.41R$. Tables are available for determining characteristic values α_{mn}, and the following is a portion of such a table.

m \ n	0	1	2	3	4
0	0.0000	1.2197	2.2331	3.2383	4.2411
1	0.5861	1.6970	2.7140	3.7261	4.7312
2	0.9722	2.1346	3.1734	4.1923	5.2036
3	1.3373	2.5513	3.6115	4.6428	5.6624

Table 1

For the lowest mode shown in Figure 1, α_{10} (which equals 0.5861) is utilized. For the radial modes, only the table values where m=0, and where n=1 or more, are utilized. As mentioned earlier, the lowest mode and the two lowest pure radial modes for a cylinder of radius R, have wavelengths of 3.41R, 1.64R and 0.896R.

For spherical systems, the wavelength is given by the equation:

$$\lambda_{\ell n} = \frac{2\pi R}{Y_{\ell n}}$$

where R is the radius of the sphere and $Y_{\ell n}$ is the root of the equation of $dj_\ell(kr)/dr=0$. Where j_ℓ is the spherical Bessel function. The following is a table of values of $Y_{\ell n}$.

ℓ \ n	1	2	3	4	5	6
0	4.49341	7.72523	10.9042	14.0663	17.2207	20.3714
1	2.08158	5.94036	9.20586	12.4046	15.5793	18.7428
2	3.34209	7.28990	10.6140	13.8463	17.0431	20.2219
3	4.51408	8.58376	11.9729	15.2446	18.4682	21.667

A mode which produces a force well at the center of the sphere is the ℓ=1 and n=1 mode. All of the radial modes, shown in Figures 14 and 15, result when ℓ=0.

Although modes have been calculated for spheres and cylinders, it is possible to use other chamber shapes, such as those of ellipsoidal or prolate spherical shapes as well as those of double pyramid shape for levitation purposes. However, the calculations for such modes can be difficult to make.

Thus, the invention provides a method and system for levitating objects within chambers of non-rectangular cross section containing a fluid (gas or liquid). Objects are levitated within cylindrical chambers by applying acoustic energy of a wavelength obtained from Bessel function properties. One wavelength relative to the chamber radius is disclosed which produces a non-radial mode with a force well along the axis of the cylinder, while additional wavelengths are disclosed for producing radial modes with force wells in the form of cylinders, concentric with the axis of the cylinder. In a similar manner, objects are levitated within a spherical chamber by applying wavelengths obtained by spherical Bessel function properties. Applying certain described wavelengths can result in a very high chamber Q so that high acoustic intensities are obtained with only moderate driving energies, while the effects of harmonics of the fundamental driving frequency are minimal. In some cases the simultaneous excitation of several modes may be used to increase the force that positions the sample.

Although particular embodiments of the invention have been described and illustrated herein, it is recognized that modifications and variations may readily occur to those skilled in the art and consequently, it is intended that the claims be interpreted to cover such modifications and equivalents.

ORIGINAL PAGE IS
OF POOR QUALITY

ACOUSTIC LEVITATION METHODS AND APPARATUS

ABSTRACT OF THE DISCLOSURE

Methods are described for acoustically levitating objects within chambers of spherical and cylindrical shape. The wavelengths for chambers of particular dimensions are given, for generating standing wave patterns of any of a variety of modes within the chambers. For a spherical chamber (10) the lowest resonant mode is excited by applying a wavelength of 3.02R, where R is the chamber radius. The two lowest pure radial modes for that chamber, are excited by applying wavelengths of 1.40R and 0.814R. For a cylindrical chamber (50) of radius R, the lowest mode is at a wavelength of 3.41R, and the lowest pure radial modes are at wavelengths of 1.64R and 0.896R.